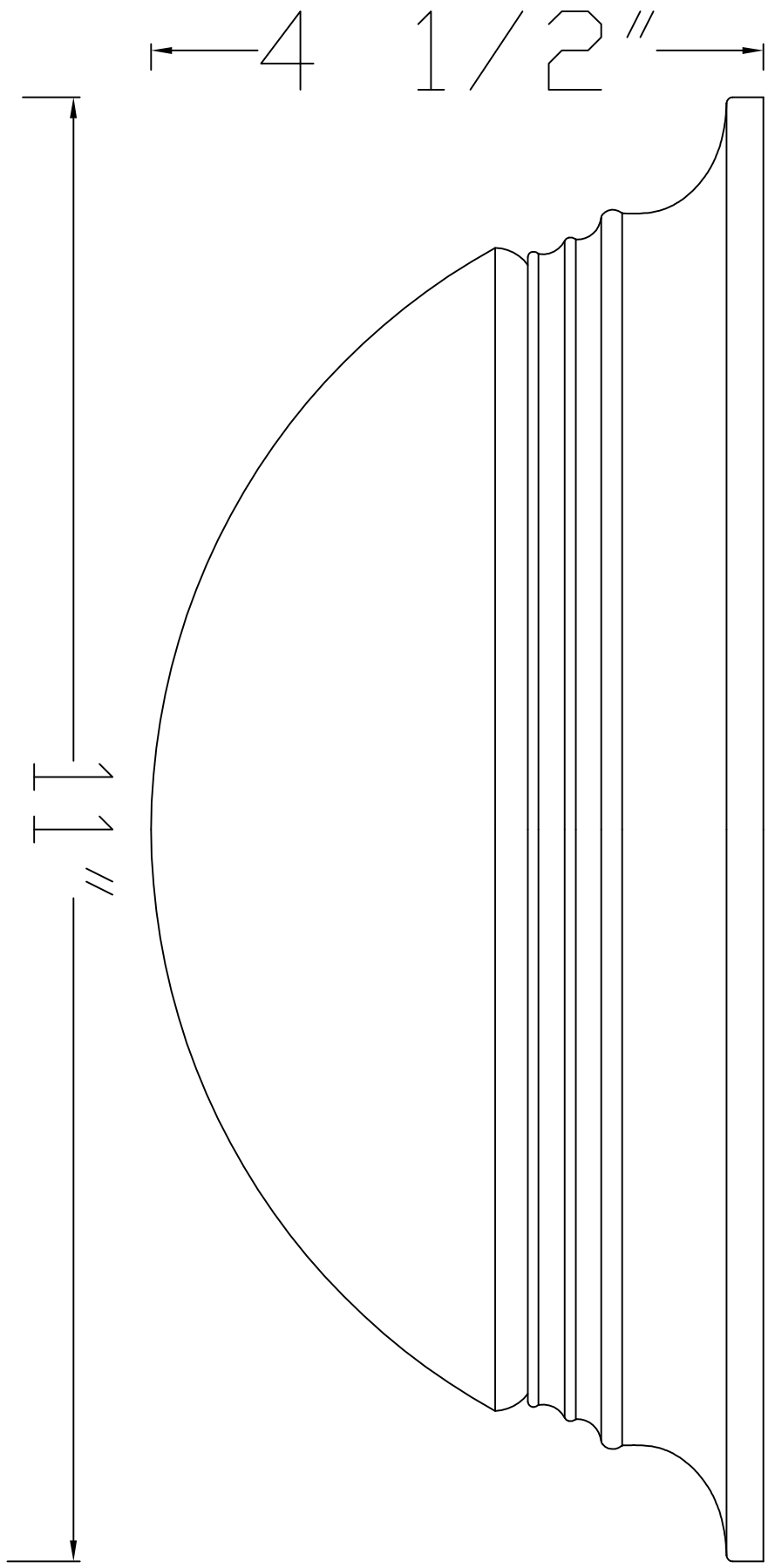
4 1/2"
11 1/2"