ITEM NO: M90102

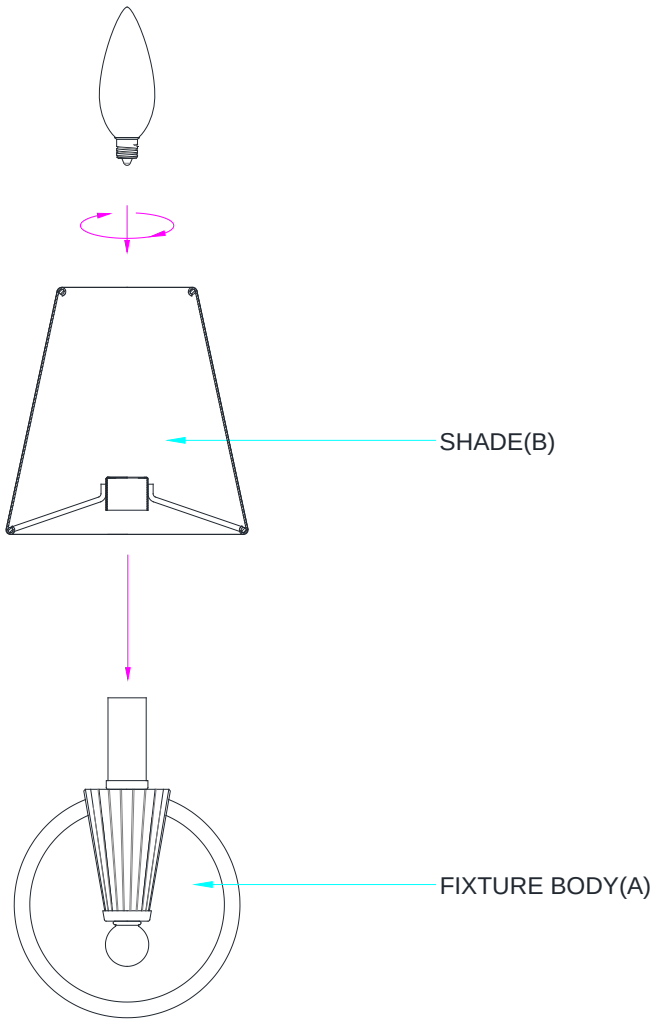

ASSEMBLY INSTRUCTIONS

1. Carefully unpack and identify all parts referring to illustration for parts identification.
2. Turn the power to the installation point OFF.
3. Carefully place the shade (B) onto the socket to the fixture body (A) as shown in the diagram.
4. Refer to the additional installation instructions included with the product for wiring and installation.
5. Install proper bulbs (not provided) into each socket referring to the markings and / or labels on the fixture for maximum wattage.
6. Restore power to the installation point and retain this sheet for future reference.